MODEL NUMBER DP0891

GaAs 5 Section Phase Shifter

FEATURES

- 1010-1110 MHz
- Constant Insertion Loss
- 48 nSec Switching Speed
- TTL Control
- 38 Pin DIP

5 BIT

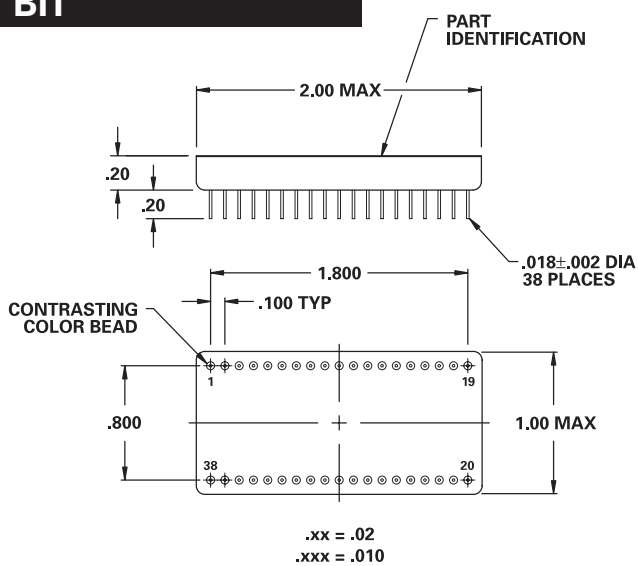

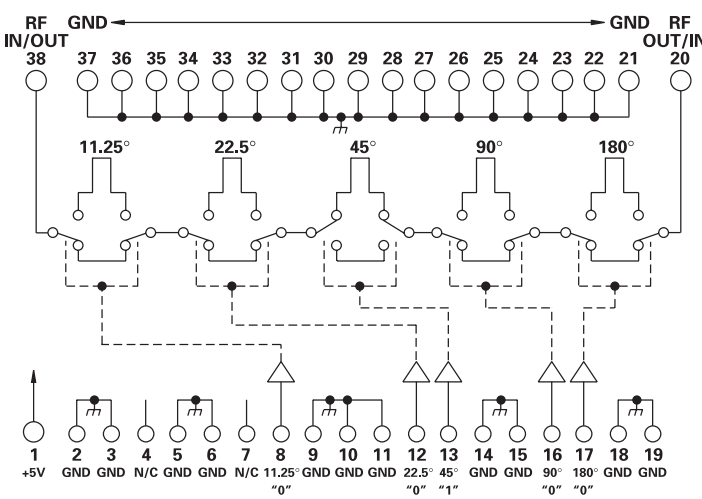

N/C = No Internal Connection

TYPICAL PERFORMANCE

at 25°C

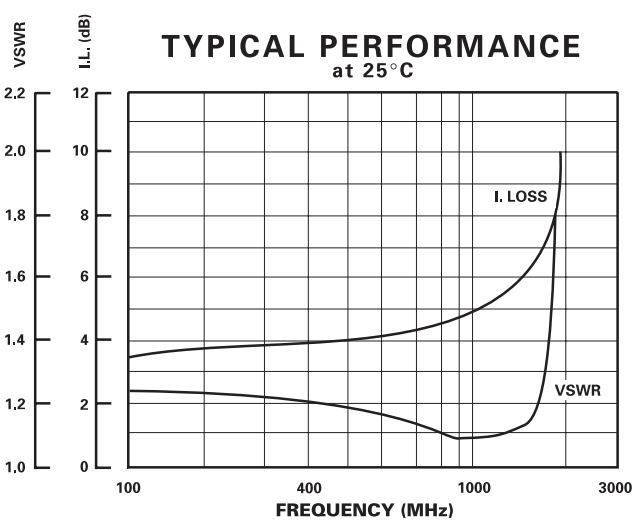

GUARANTEED PERFORMANCE

Parameter		Min	Typ	Max	Units	Conditions
Operating Frequency		1010		1110	MHz	
DC Current			1.2	10	mA	At +5 VDC Supply
Control Type			TTL			5 Line Logic "0" = Thru Logic "1" = Phase Shift
Control Current	*High*		1	±20	µA	VIH = +3.0 V
	Low		1	±20	µA	VIL = +0.5 V
Insertion Loss			5.3	7.5	dB	
	Stability		±0.2	±0.5	dB	For All Phase Shifters
Phase Shift	*LSB*		11.25		DEG	
	Range	0		348.75	DEG	11.25, 22.5, 45, 90, 180
	Accuracy			±5	DEG	Any 1 Bit
				±10	DEG	Any Combination
VSWR			1.15/1	1.3/1		
Impedance			50		OHMS	
Switching Speed			48	100	nSec	50% TTL to 90% / 10% RF
Transition (Rise/Fall) Time			25		nSec	90% / 10% or 10% / 90% RF
Switching (Video) Transients			180		mV	Peak Value
Intercept Points	*2nd*		+80		dBm	
	3rd		+50		dBm	
RF Power	*Operate*		+26	+24	dBm	0.1 dB Compression
	No Damage			+27	dBm	
Operating Temperature		-40	+25	+70	°C	TA